# Bollard Testing Device and Procedures

Juan Carrillo, Ricardo Contreras, and Zachary Harwood
Isabella Ramirez, Mechanical Engineering, UCSB Grad Student
Gerritt Lang, NAVFAC EXWC, CI9

## Purpose

Bollards are short, thick posts bolted down to piers. The Navy uses several types of bollards to dock their ships by tying a rope between them. Millions of dollars are spent each year to maintain these bollards and repair any damage that may occur.

**The Problem**

- Anchor bolts are failing
- No standard way to test bollards
- Inconsistent testing frequency
- Major safety hazard
- Financial burden
- Different bollard shapes and sizes

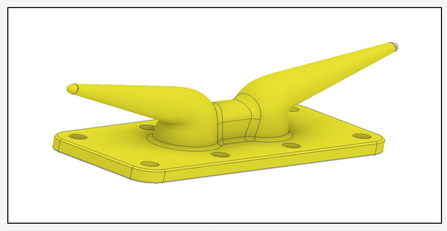

Cleat

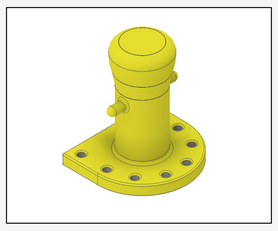

Single Bitt

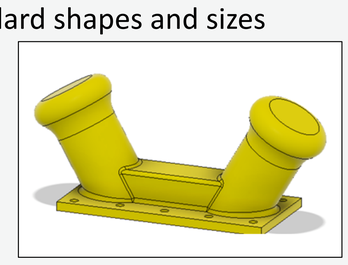

Double Bitt

**Breakdown**

Find testing methods to examine bollards

**Non-Destructive**
Detect
- Voids
- Delamination
- Cracks

→ Ultrasonic Testing

**Destructive**
- Apply 200 tons
- Robust design
- Easily Deployable

→ Reaction Frame

## Ultrasonic Testing

After researching several forms of nondestructive testing, we have come to the conclusion that ultrasonic is the most beneficial form of testing. Cracks and voids are caused after several years in service; while moisture from the ocean and air cause corrosion and delamination. Ultrasonic testing is able to detect all these defects.

**How it works**

- A sensor is placed on top of the bolt
- The frequency used is dependent on the length of the bolt
- After the signal is sent, the user reads the interface and is able to determine defects
- Large amplitudes suggest larger sized flaws

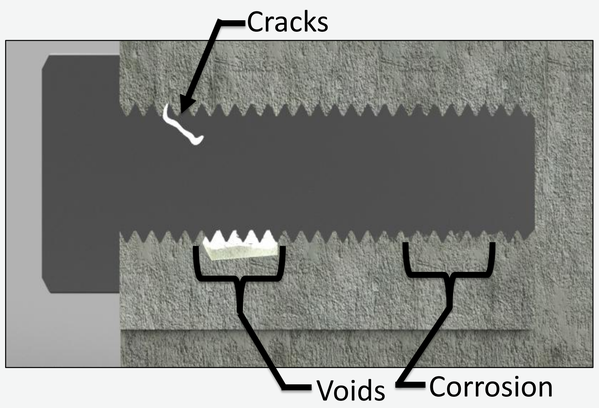


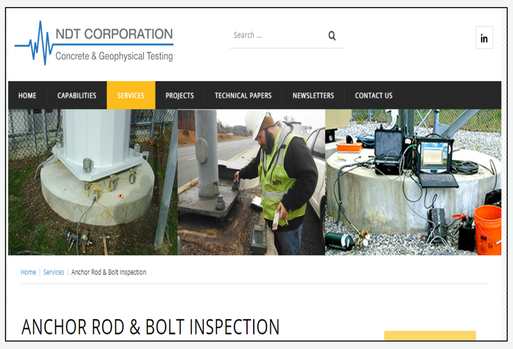


Commercial companies, such as NDT Corporation, can perform ultrasonic tests on the anchor bolts. A cost benefit analysis shows that it is currently cost effective to have a private company preform the work; until government personal can be trained to use the equipment.

## Test Frame

To design our frame we used AutoDesk Inventor, a 3D modeling software. We had to create a frame that would be functional for a variety of bollards and piers. We made two designs, each with unique capabilities, and are working on combining both designs to create one frame with complete versatility.

**Frame Objectives:**

- Versatile to different bollard shapes and sizes
- Can apply 200 tons of force
- Can apply a load through variety of angles up to 60 degrees
- Easily assembled and deployed

**Frame I:**

This frame is specifically designed to be used on single bits and cleats. Using a pulley system, a rope wraps around the frame and applies a force to the bollard. The legs and angle of applied load are able to be adjusted

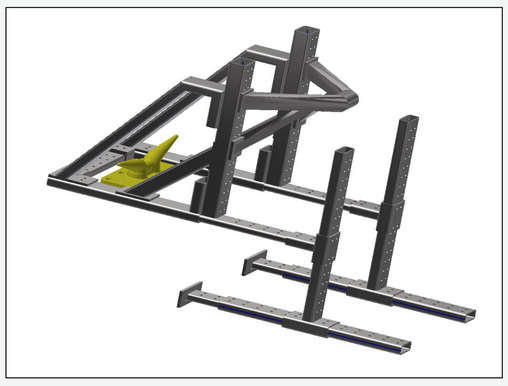

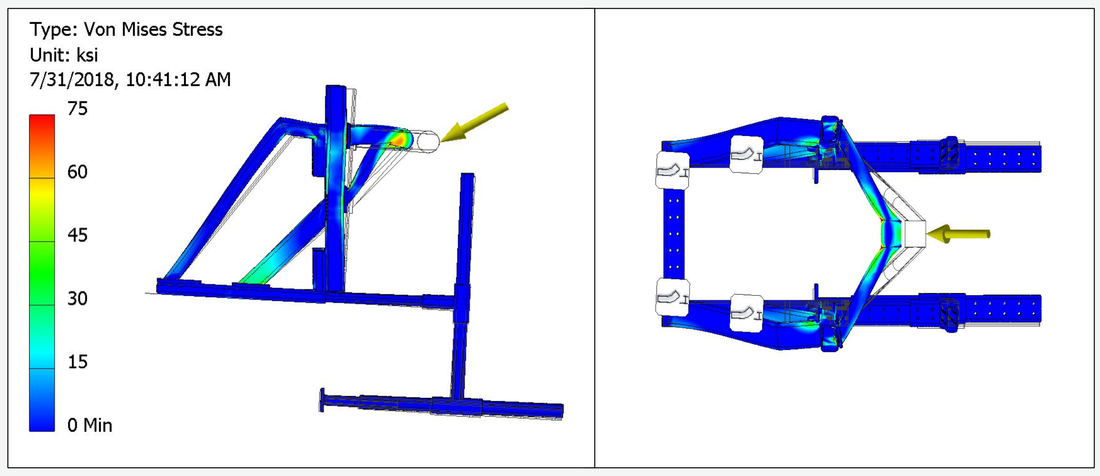


Above is a stress analysis of Frame I when applying 100 tons of force. The Von Mises stress reached 75 ksi in some areas. The allowable stress for the steel used is 60 ksi, meaning this design would experience slight, but acceptable, yielding when loaded.

**Frame II:**

This frame is designed to be uses on higher rated bollards. This design utilizes a replaceable cone on which the cylinder rest, and can be angled at 0, 30 or 60 degrees. The use of a high friction rubber pad allows the test at 60 degrees to be run independent of supports. While the 0 and 30 degree test must be run connected to Frame I.

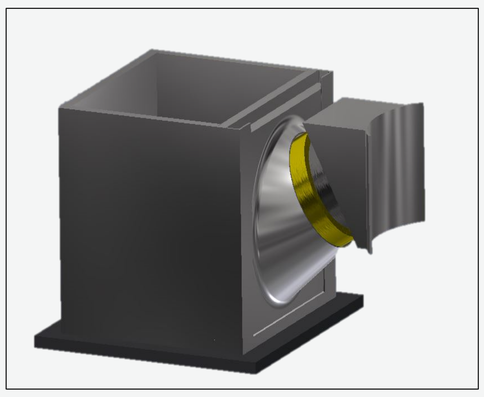

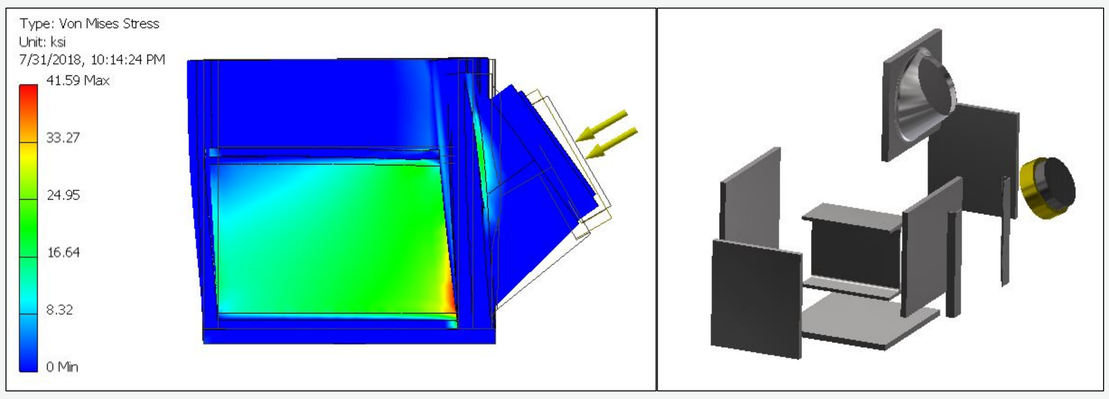


Above is the stress analysis on Frame II applying 200 tons of force. The Von Mises stress reached 42 ksi in some areas. This stress is below the allowable stress for the steel selected, yielding will not occur.

## Future Work

- Facilitate incorporating ultrasonic test from outside contractors
- Determine how the void-to-volume ratio changes the strength of the bolts in the concrete
- Gather resources and funds to start manufacturing the frame